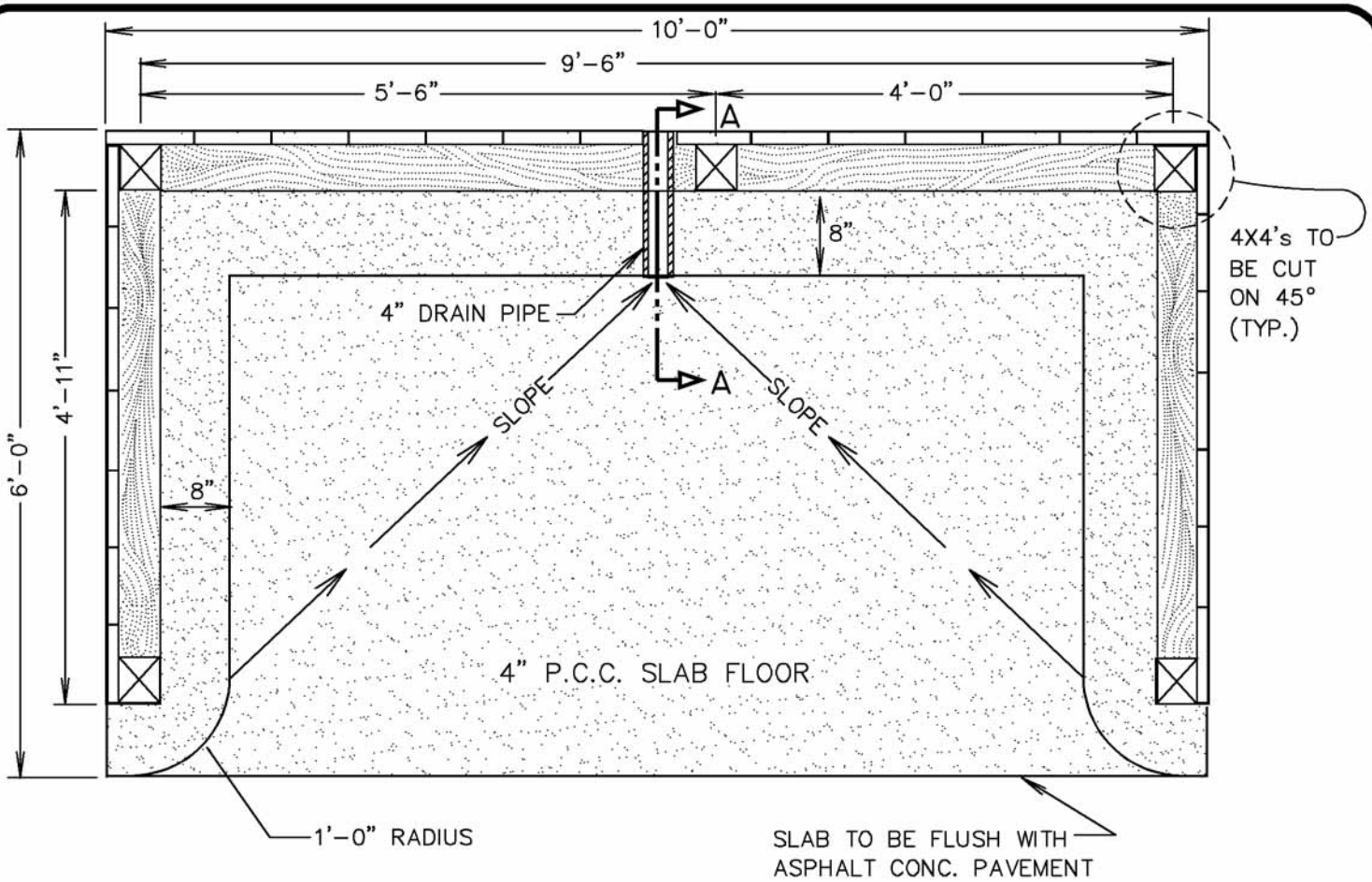

PLAN

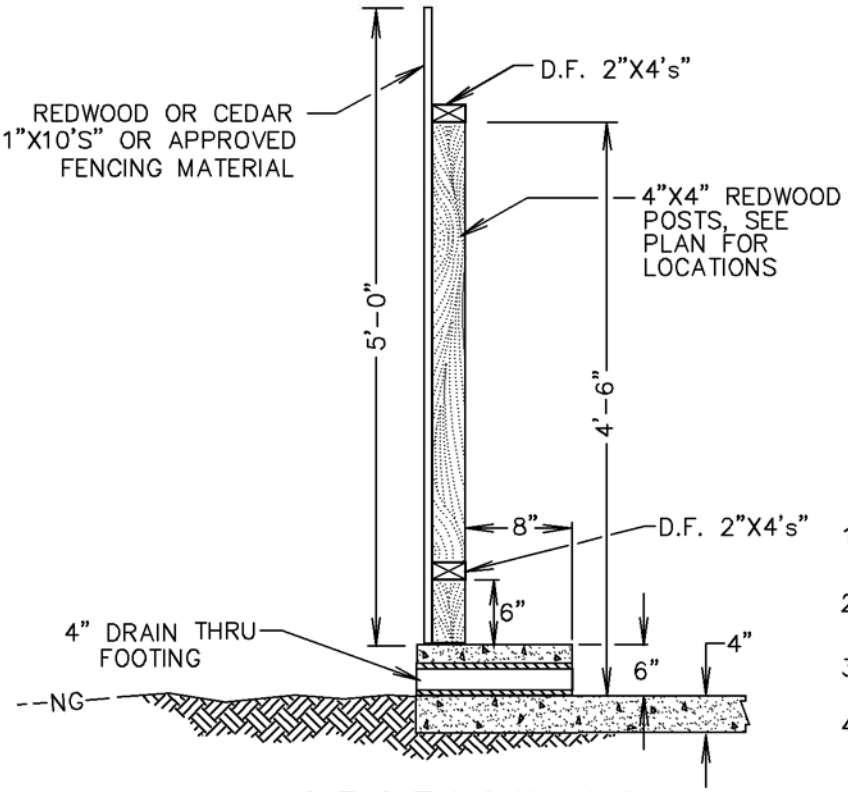

SECTION A-A

NOTES:

1. SLAB FLOOR AND FOOTINGS SHALL BE 2500# DESIGN PORTLAND CEMENT CONCRETE.
2. 4"X4" RWD. POSTS TO BE ANCHORED TO CONCRETE WITH POST SUPPORTS.
3. GROUND TO BE SLOPED AWAY FROM SLAB FOOTING.
4. THIS STANDARD IS FOR SINGLE 3 CU.YD. OR SMALLER BINS. SUBMIT DRAWINGS TO THE CITY ENGINEER FOR LARGER OR MULTIPLE BIN ENCLOSURES.

CITY OF PORTERVILLE
ENGINEERING DIVISION

Harold L. Hill 9-3-85
CITY ENGINEER R.C.E. 20186 DATE

WOODEN
TRASH CONTAINER ENCLOSURE

T-2.1

REV.